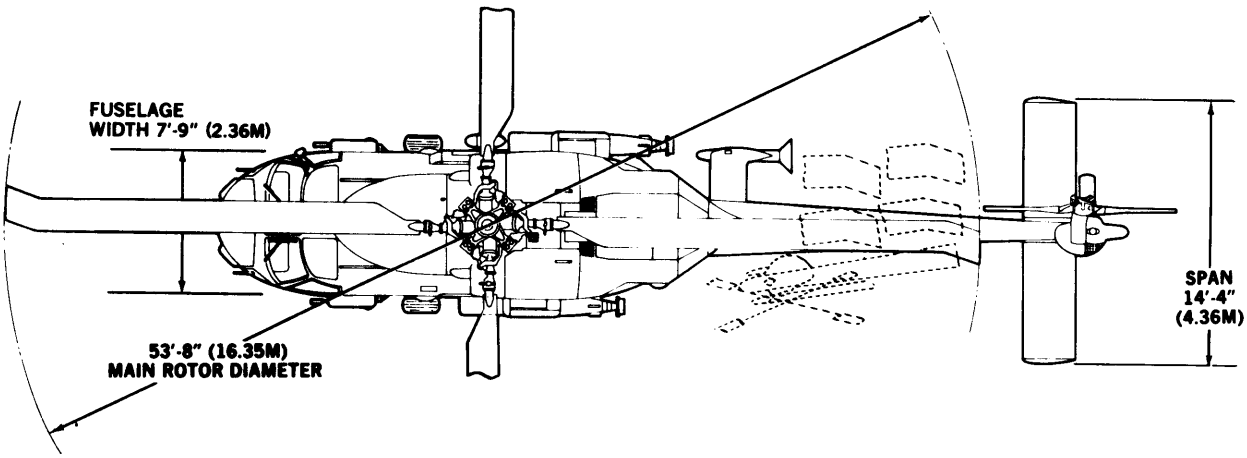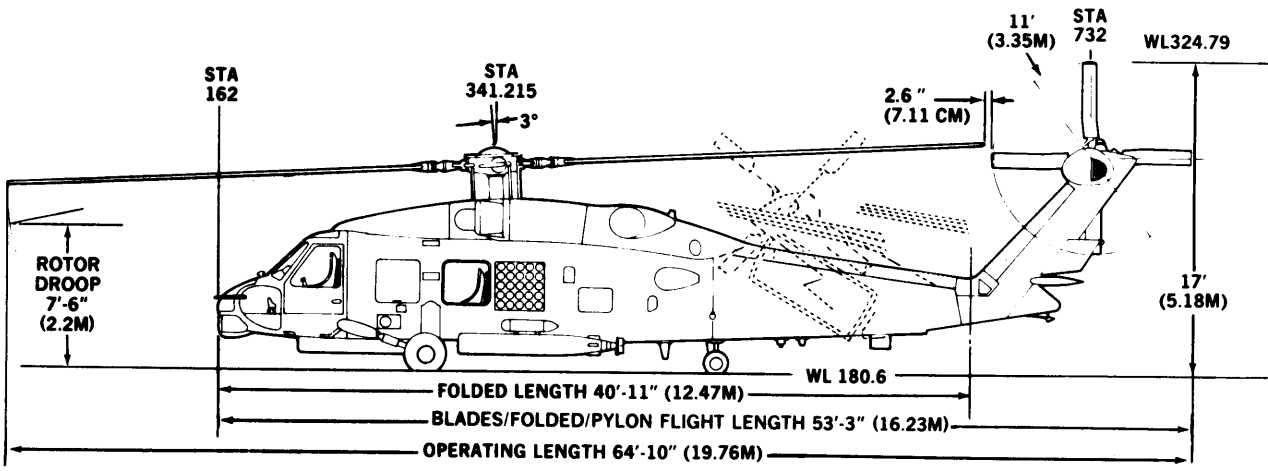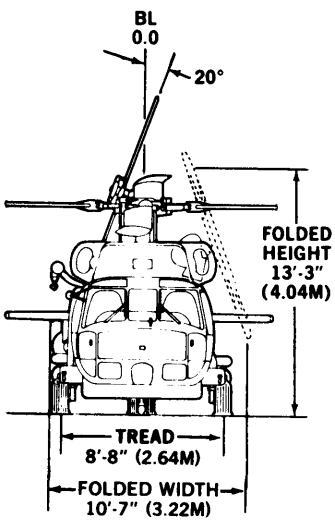AIRCRAFT DIMENSIONS